NOZZLE SCHEDULE							
ITEM	SIZE	RATING	TYPE	MATL	PROJ IN	PROJ OUT	REMARKS
A	4"	N.P.T.	W.F.	C.S.	STD.	STD.	EMERGENCY VENT OPENING
B	2"	N.P.T.	W.F.	C.S.	STD.	STD.	
C	3/4"	N.P.T.	W.F.	C.S.	STD.	STD.	DRAIN

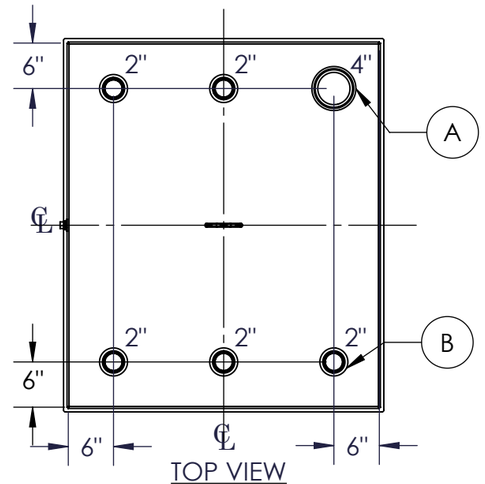

TOP VIEW

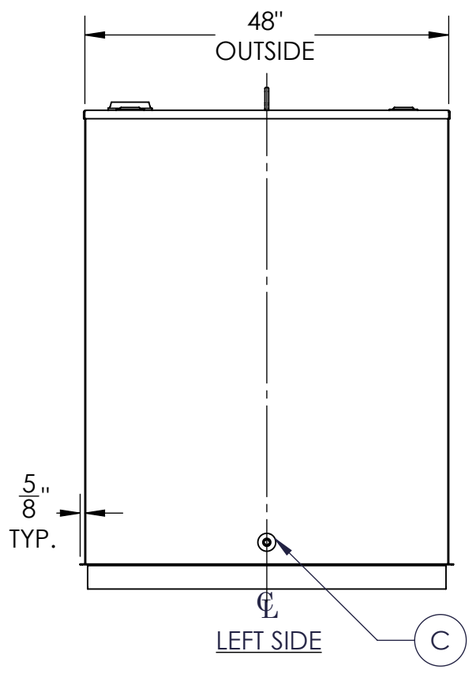

LEFT SIDE

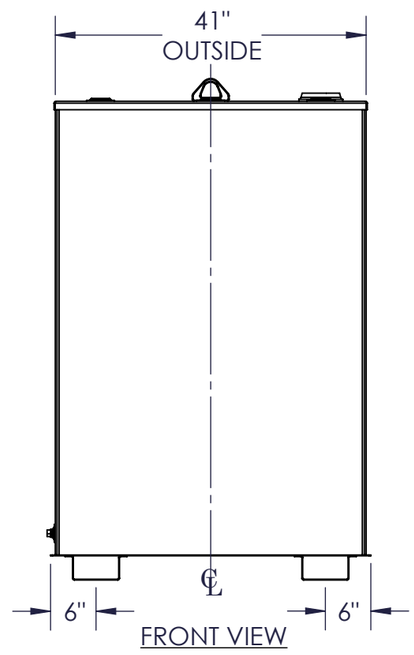

FRONT VIEW

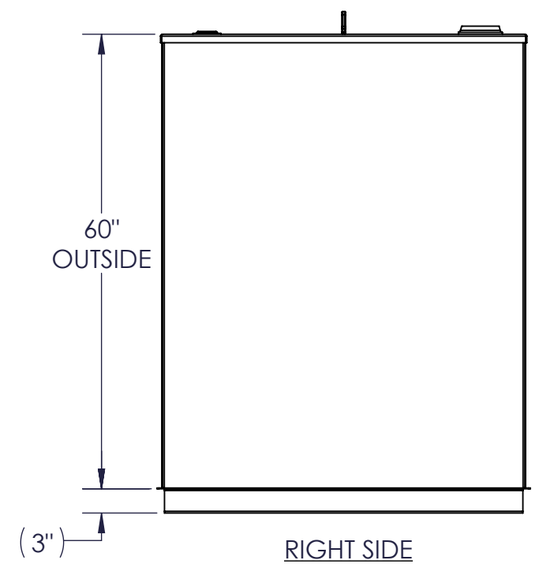

RIGHT SIDE

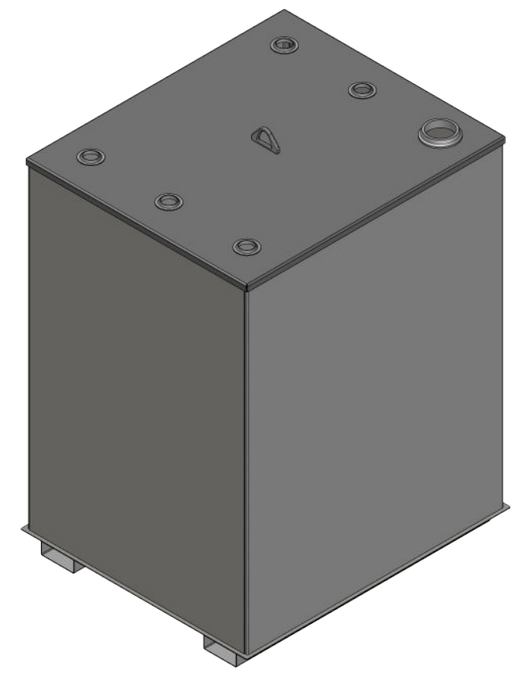

NOTES:
A. MATERIAL: H.R. CARBON STEEL
B. DESIGN & OPERATING PRESSURE: ATMOSPHERIC.
C. DESIGN & OPERATING TEMPERATURE: AMBIENT.
D. TANK TO BE BUILT & LABELED PER U.L. SPEC. #142.
E. TANK TO BEAR MANUFACTURERS & U.L. LABELS ONLY.
F. TANK TO BE AIR TESTED WITH WATER & SOAP SUDS SOLUTION.
G. INTERIOR: REMOVE WELD SLAG (SHIP CLEAN & DRY).
H. EXTERIOR: GRAY PRIMER INCLUDED; SEE SALES ORDER FOR TOP COAT.
I. ALL FITTINGS TO BE PROTECTED FOR SHIPMENT.
J. CUSTOMER HAS THE RESPONSIBILITY TO VERIFY ALL DIMENSIONS.

APPROVAL FOR CONSTRUCTION
SCHEDULE A - MASTER TERMS & CONDITION OF SALE*

☐ APPROVED AS DRAWN.

☐ APPROVED WITH NOTED CHANGES, CONSTRUCTION WILL BE SCHEDULED WHEN SIGNED DRAWING AND CONFIRMED ORDER ARE RECEIVED.

SIGNATURE:_____

DATE:_____

SALES ORDER: -

WEIGHT (LBS): **523**

ONE CLARION
www.oneclarion.com
PO Box 700338
Wabasso, FL 32970
863-261-8388
info@oneclarion.com

All units inches unless stated otherwise

DESCRIPTION:
500 GALLON RECTANGULAR UL 142 SINGLE WALL TANK

CUSTOMER:

P.O.#

DATE:	SCALE:	DWG.#	DRAWN BY: AJC
2/8/2023		FTSBSW-0500	CHKD BY: –

This drawing may contain CONFIDENTIAL information and is intended only for the use of the specific individual(s) to which it is addressed